REVISIONS				
ISS	DESCRIPTION	DRAWN	APP'D	DATE

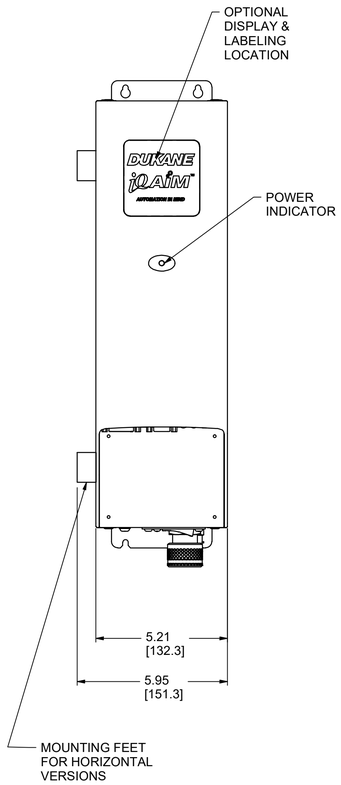

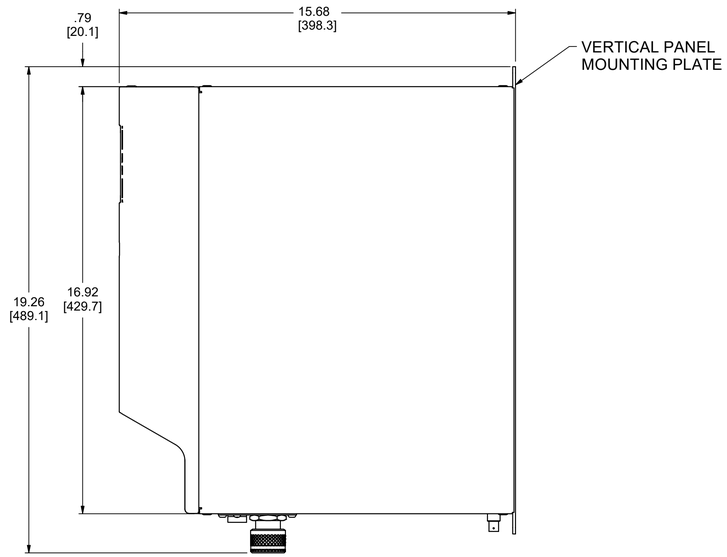

ALLOW 5" (125 MM) FOR CABLE ROUTING

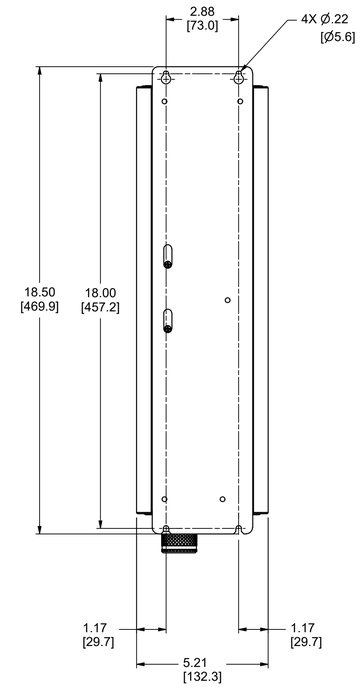

REAR VIEW WITH MOUNTING PLATE

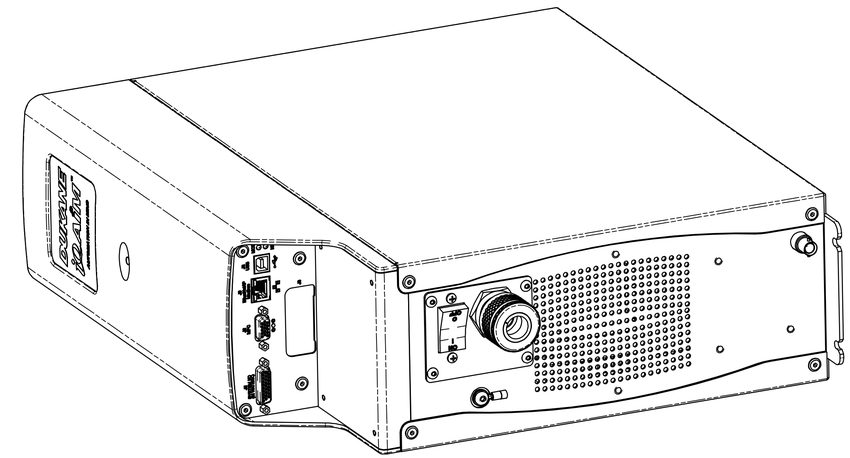

PICTORIAL VIEW:
SCALE 1 / 2

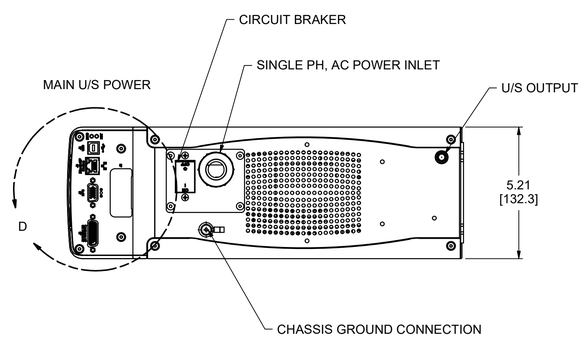

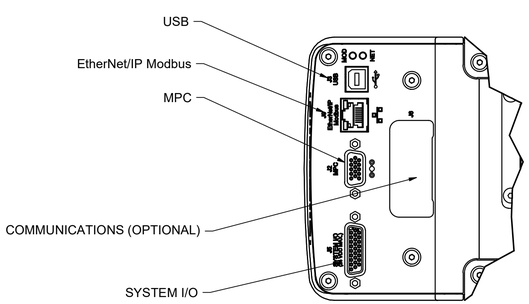

DETAIL D
SCALE 2 / 3

WEIGHT: 33.6 LBS (15.25 kg)

MATERIAL:

FINISH: -

CAD GENERATED - DO NOT MANUALLY REVISE			UNLESS OTHERWISE SPECIFIED:	DIMENSIONS ARE IN INCHES	2 PLACE DECIMAL: ± .010	3 PLACE DECIMAL: ± .005	FRACTIONS: ± 1/64	ANGLES: ± .5'
	NEXT ASSY	FIRST USED	DUKANE	5 kW, SINGLE PHASE AIM GENERATOR		SCALE: 1/3 / ECN: 11171	DATE: 8/28/2017	
						DRAWN BF / APPROVED BF	NO. 400-2558	00
SHEET SIZE: D	APPLICATION		ST. CHARLES, ILLINOIS 60174			CHECKED BF / ENGINEER BF	SHEET 1 OF 1	ISS