Dimensions

● SCPD2-(L) basic type (00)

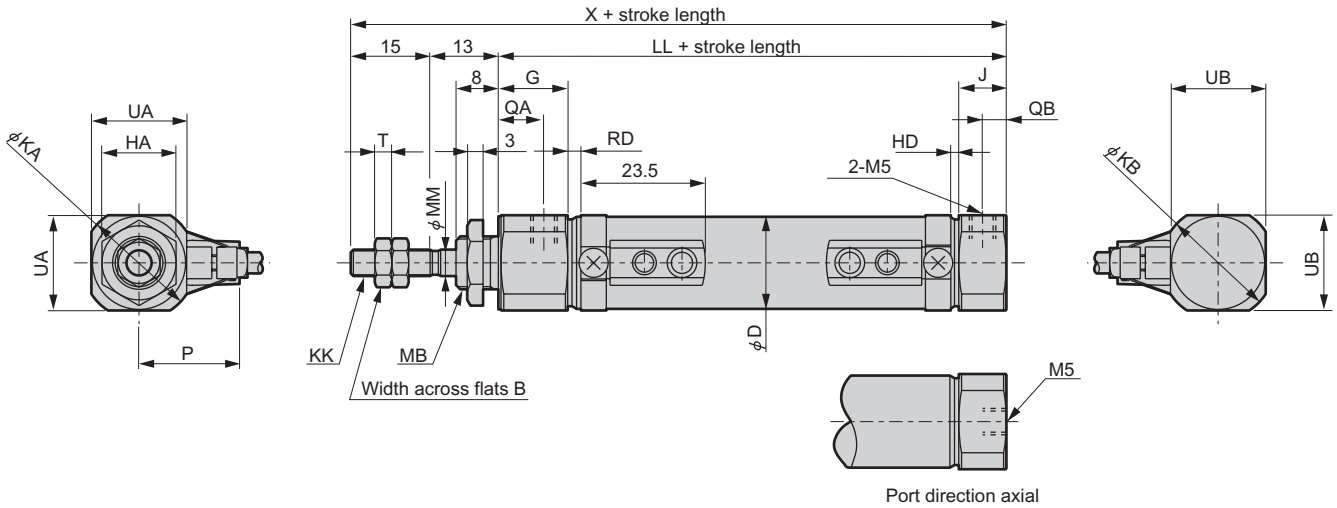

Symbol / Bore size (mm)	Basic type (00) basic dimensions															
	B	D	G	HA	J	KA	KB	KK	LL	MB	MM	QA	QB	T	UA	UB
ϕ6	5.5	6.8	17	8	8	13.5	13.5 (9)	M3	47	M6	3	13	4	1.8	11	11 (8)
ϕ10	7	11	12.5	11	9	14.5	14.5	M4	46	M8 x 1.0	4	8	4.5	2.4	12	12
ϕ16	8	17.4	13	14	9	21.5	21.5	M5	46	M10 x 1.0	5	8.5	4.5	3.2	18	18

Symbol / Bore size (mm)		With switch			
	X	RD	P	HD	
ϕ6	75	1.5	14	1.5	The axial direction port is shown in ( ).
ϕ10	74	3	16	1.5	
ϕ16	74	2.5	19	1.5	

Note 1: Refer to pages 15 and 16 for details on the support style other than the basic type (00).
Note 2: Refer to page 78 for dimensions drawings of accessories.