COMPACT GAS SPRING

Note:
Initial spring force at 150 bar = 18300 daN

Order No for spare parts kit: 2490.14.18300

Gas spring without valve
Order No (example): 2490.14.18300. .P

When mounting to floor, contact over the entire floor of the cylinder tube must beensured!
Before fitting the adapter base plate remove the valve from the gas spring.
If vibration occurs, tighten the fixing screws accordingly.

Pressure medium: Nitrogen N_2
Max. filling pressure: 150 bar
Min. filling pressure: 25 bar
Working temperature: 0°C to +80°C
Temperature related force increase: ± 0.3%/°C
Max. recommended extensions per minute: approx. 80 to 100 (at 20°C)
Max. piston speed: 0.8 m/s

2490.14.18300.

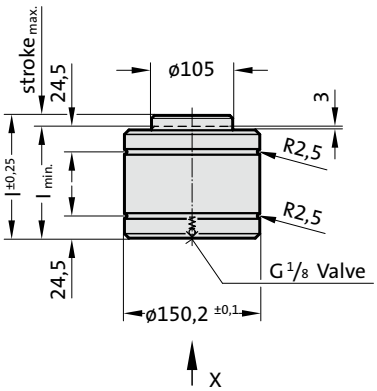

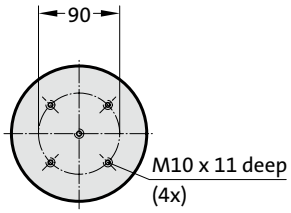

View X

APPROVED PED 2014/68/EU

S>max | V>max | P>max | Flex Guide

2490.14.18300.

Compact gas spring

Order No	Stroke$_{max.}$ (s)	$l_{min.}$	l	g_2*
2490.14.18300.010	10	100	110	89
2490.14.18300.016	16	120	136	109
2490.14.18300.025	25	140	165	129
2490.14.18300.032	32	165	197	154
2490.14.18300.040	40	195	235	184
2490.14.18300.050	50	220	270	209
2490.14.18300.065	65	258	323	247

*see mounting example

2480.00.20.18300

Adapter baseplate with connecting Fitting

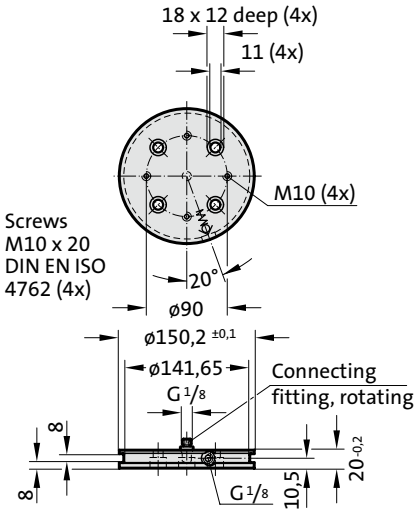

Initial spring force
versus charge pressure

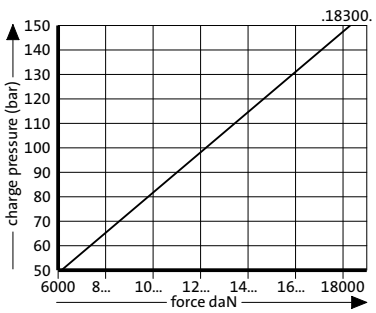

Spring force Diagram displacement versus stroke rise

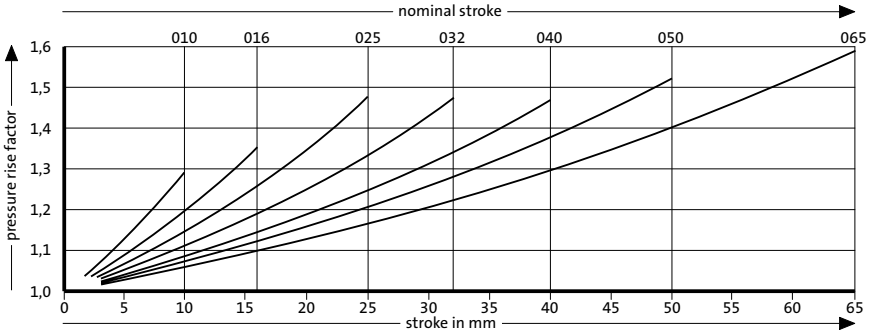

Pressure rise factor accounts for displacement but not external influences!